INTERIOR LIGHTS

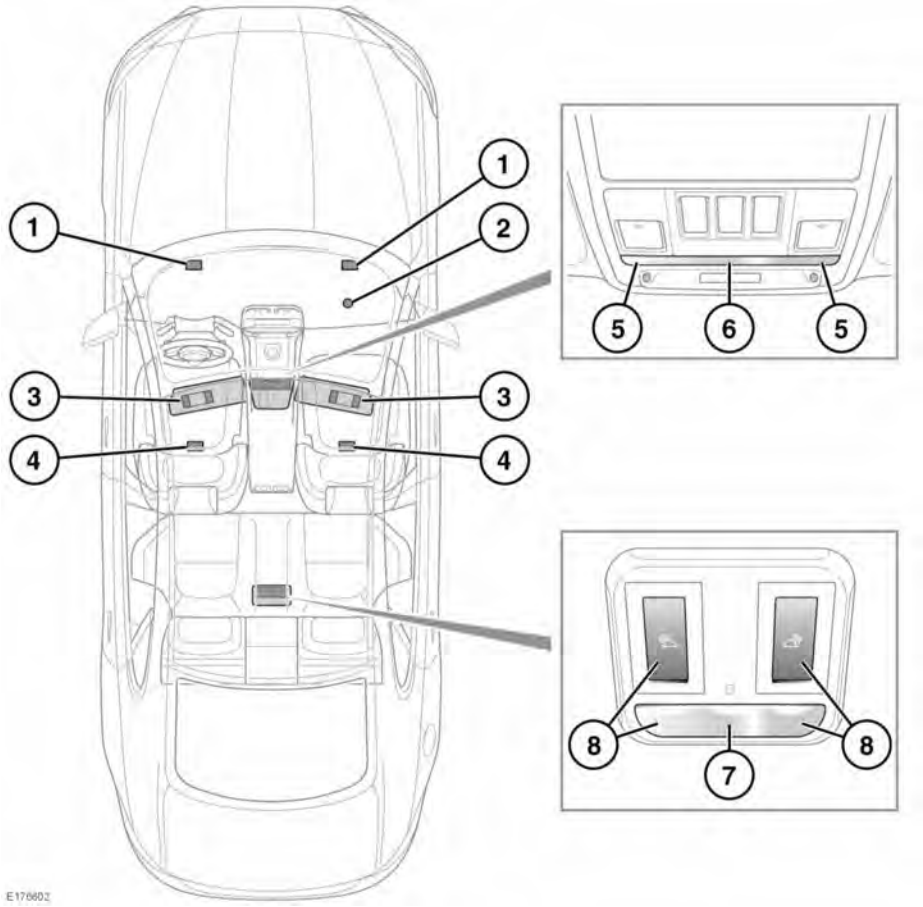

1. Front seat footwell lamps.
2. Glovebox lamp: Open to illuminate.
3. Vanity mirror lamps: Lift the sun visor flap to illuminate.
4. Rear seat footwell lamps.
5. Front reading lamps: Touch the lens briefly to switch on/off.
6. Front interior courtesy lamp: Touch the lens briefly to switch on/off.
7. Rear interior courtesy lamp.
8. Rear reading lamps: Press the appropriate button to activate a reading lamp manually. Press again to switch off.