AIRBAGS

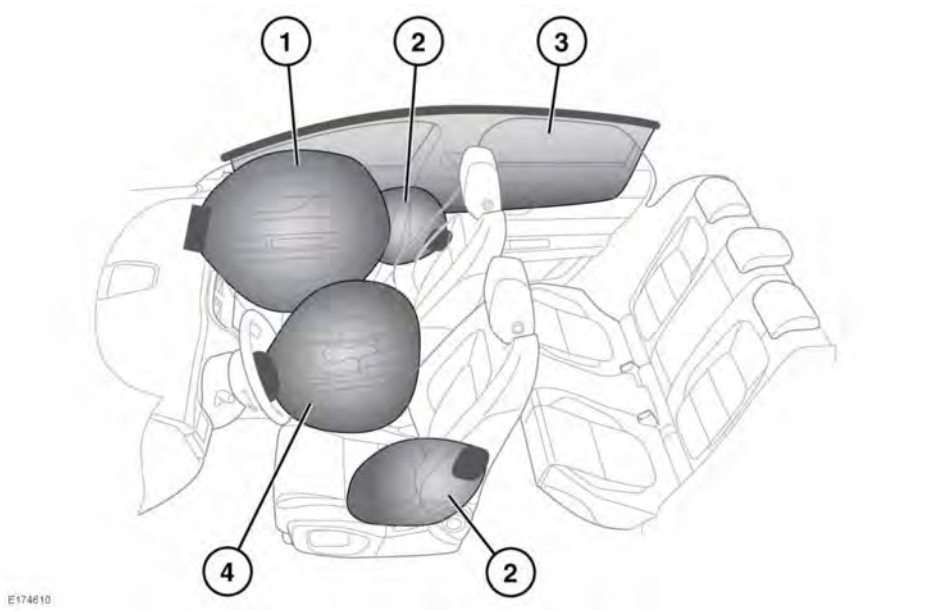

1. Front passenger airbag.
2. Front seat side airbags.
3. Curtain airbags.
4. Driver's airbag.

Note: *The general location of airbags fitted to the vehicle are marked by the word AIRBAG.*

Always contact a Retailer/Authorised Repairer if:

- An airbag inflates.
- The front or sides of the vehicle are damaged.
- Any part of the airbag Supplementary Restraint System (SRS) shows signs of cracking or damage, including trim covering airbags.
- The amber airbag warning lamp illuminates.

High speed impacts may cause serious injury or death, irrespective of safety features fitted to a vehicle. Always drive with caution and consideration for the vehicle's characteristics, road and weather conditions, and do not exceed any speed limits in force.

Seat belts should be worn at all times, by the driver and passengers in all seating positions. The airbag Supplementary Restraint System (SRS) cannot provide protection in some types of impact. Under these circumstances, the only protection will be provided by a correctly worn seat belt.