LIGHTING CONTROL

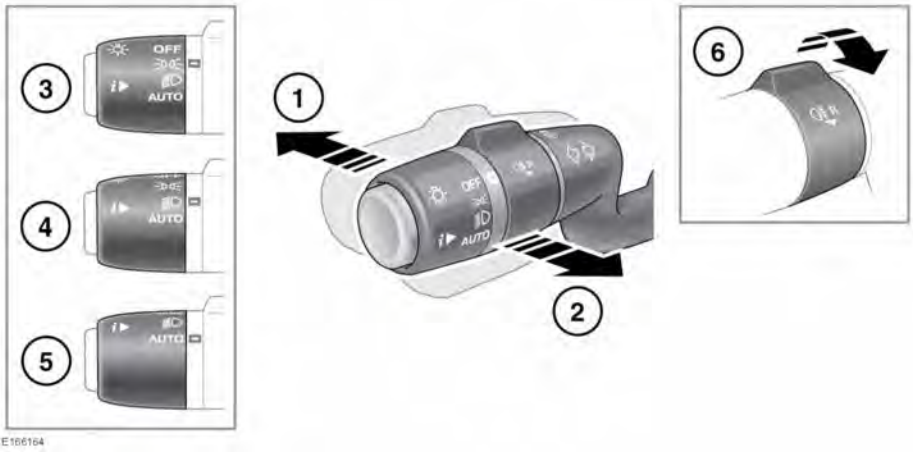

1. With the headlamps on, push the control away from the steering wheel to select high beam. The Instrument panel warning lamp will illuminate. See **55, HIGH BEAM (BLUE)**.

   Note: *Do not use high beam where it may distract other road users.*

2. Pull the control towards the steering wheel and release to flash the high beam on and off. High beam will remain on for as long as the switch is held.
3. Side lamps: Rotate the control to this position to switch the side lamps on. The Instrument panel warning lamp will illuminate. See **54, SIDE LAMPS (GREEN)**.
4. Headlamps: Rotate the control to this position to switch the headlamps on.
5. **AUTO**: With Auto lamps selected, when the ambient light fades and the ignition is on, the side lamps, tail lamps, dipped beam headlamps and licence plate lamps will switch on automatically. Headlamp courtesy delay, Auto high beam and the Windscreen wipers detection may also be activated.

   Note: *Low exterior light levels, caused by adverse weather conditions, may also cause the Auto lamps to activate.*

6. Rear fog lamps: Will operate only while side lamps, headlamps or Auto lamps are selected. Turn the collar towards the steering wheel and release. The Instrument panel warning lamp will illuminate. See **54, REAR FOG LAMP (AMBER)**.
   To switch off the rear fog lamps: Turn the collar towards the steering wheel again and release.

INSTRUCTIONAL VIDEO

