## WHEEL CHANGING

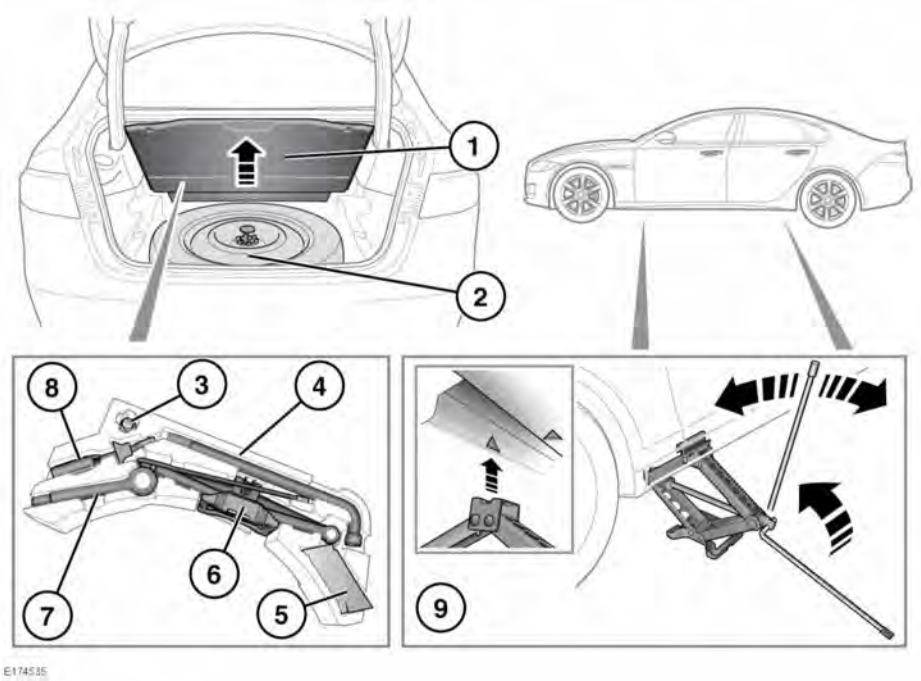


For vehicles that were not supplied with a spare wheel, see **246, TYRE REPAIR KIT**.

1. Luggage compartment floor panel: Lift the rear edge and secure to the vehicle body.
2. Temporary-use spare wheel retaining bolt/ clamp.
3. Locking wheel nut adaptor.
4. Wheel brace.
5. Wheel chocks.
6. Jack assembly. Observe the instructions printed on the jack.
7. Towing eye.
8. Reset tool. See **192, PASSIVE DIESEL MISFUELLING PROTECTION DEVICE**.
9. There are 4 jacking points on the underside of the floor. 2 indented, triangular indicators are provided on each sill cover. These indicate the location for the jack.

**Remove the spare wheel before jacking the vehicle, to avoid destabilising the vehicle when raised.**

See **255, IMPORTANT – USE OF SPARE TYRE** and **254, REMOVING THE SPARE WHEEL**.

**Before raising the vehicle, refer to all warnings at the beginning of this section of the Owner's Handbook.**

Before changing a wheel, read and observe the warnings, see **250, WHEEL CHANGING SAFETY**.

Only jack the vehicle using the jacking points described, or damage to the vehicle could occur.

Before raising the vehicle, use the wheel nut brace to slacken the wheel nuts of the wheel to be replaced, by half a turn counter-clockwise. Use the wheel chock. See **254, USING WHEEL CHOCKS**.

1. Open the luggage compartment. See **10, OPENING AND CLOSING THE LUGGAGE COMPARTMENT**.
2. Lift the rear edge of the luggage compartment floor panel and secure it to the vehicle body.
3. Continually rotate the spare wheel's retaining centre clamp plate counter-clockwise to release and then continually rotate the top plate of the centre bolt counter-clockwise to completely remove the retaining plate/bolt assembly. See **254, REMOVING THE SPARE WHEEL**.
4. Remove the spare wheel and the vehicle's tool kit.
5. Fit the wheel chocks to the relevant wheel. See **254, USING WHEEL CHOCKS**.

**Make sure that the wheel chock is fully engaged with the tyre and the road surface.**

6. Use the wheel brace to loosen the wheel nuts, by turning half a turn counter-clockwise.

**Do not remove the wheel nuts until the vehicle has been safely and securely raised with the jack.**

7. Position the jack under the relevant jacking point, under the floor.

   ***Note:*** *Do not allow the jack to contact the sill at any other point, as damage may result.*

8. Turn the jack lever clockwise to raise, until the jack head locates into the jacking point. Make sure that the base of the jack is in full contact with the road surface.
9. Raise the vehicle using the jack, with a slow steady operation. Avoid rapid, jerky actions as they may cause the vehicle/jack to become unstable.
10. Stop when the tyre is just clear of the ground.
11. Remove the loosened wheel nuts and place them together where they cannot roll away.
12. Remove the wheel and place to one side. Do not lay the wheel on its face, as this may damage the finish.
13. Fit the spare wheel to the vehicle, by aligning the spare wheel with the vehicle's wheel studs and then slide onto the hub.
14. Refit the wheel nuts and then lightly tighten them in the sequence shown in the illustration. Make sure that the wheel is correctly and evenly fitted to the hub, by checking that each wheel nut is in a similar position.
15. Make sure that the space under the vehicle is clear of obstructions, then lower the vehicle slowly and smoothly.
16. With all wheels on the ground and the jack removed, fully tighten the wheel nuts, in the sequence shown in the illustration, to the correct torque of 125 Nm.

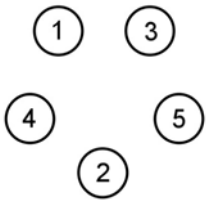

E132675