TYRE REPAIR KIT

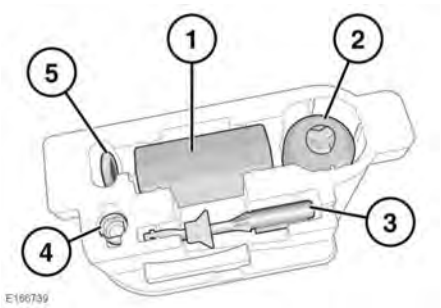

If you are in any doubt regarding your ability to carry out the instructions, contact a Retailer/Authorised Repairer before attempting the repair.

For vehicles not supplied with a spare wheel, there will be a tyre repair kit under the luggage compartment floor panel. See **250, WHEEL CHANGING SAFETY**. The tyre repair kit can be used to repair one punctured tyre and it is essential that you read the complete tyre repair kit section of this handbook before attempting to repair a tyre.

The tyre repair kit will seal most punctures with a maximum diameter of 6 mm.

Note: *The sealant used in the tyre repair kit has a shelf life and the expiry date is shown on the tyre sealant bottle. Make sure that the container is replaced before the expiry date. Also make sure that the sealant is renewed after each use.*

1. Compressor.
2. Sealant bottle.
3. Reset tool. See **192, PASSIVE DIESEL MISFUELLING PROTECTION DEVICE**.
4. Locking wheel nut adaptor.
5. Towing eye.

TYRE REPAIR KIT SAFETY INFORMATION

Some tyre damage may only be partially sealed, or may not seal at all, depending on the amount and type of damage. Any loss of tyre pressure can seriously affect vehicle safety.

Do not use the tyre repair kit if the tyre has been damaged by driving while under-inflated.

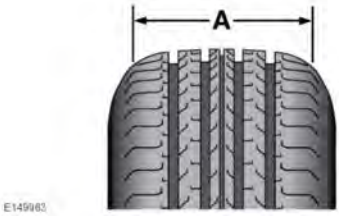

A - Tyre tread area.

Only use the tyre repair kit to seal damage located within the tyre tread area (A).

Do not use the tyre repair kit to seal damage to the tyre's sidewall.

Do not exceed 80 km/h (50 mph) when a repaired tyre is fitted to the vehicle.

The maximum distance that should be driven when a repaired tyre is fitted, is 200 km.

When a repaired tyre is fitted, drive with caution and avoid sudden braking or steering manoeuvres.

Only use the tyre repair kit for the vehicle with which it was supplied.

Do not use the tyre repair kit for any other purpose than tyre repair.

Never leave the tyre repair kit unattended, when in use.