TOWING A TRAILER

Never exceed the maximum weights for either the vehicle, or the trailer. Doing so can cause accelerated wear and damage to the vehicle. It can also adversely affect vehicle stability and braking, which in turn can lead to a loss of control and an increased braking distance, resulting in a rollover or crash.

Only fit towing accessories approved by the vehicle manufacturer. These have been designed to help make sure that the handling and stability of the vehicle is not affected, if used correctly, and according to the manufacturer's instructions.

Never use towing eyes or lashing points to tow a trailer. They have not been designed for this purpose and doing so may cause them to fail, resulting in injury or death.

Note: *A reduction in the performance of the Air conditioning system is a normal function under high load towing conditions.*

Note: *Engine power output always reduces with increased altitude. At 1 000 metres above sea level and for every additional 1 000 metres, deduct 10% from the Gross Train Weight (GTW). See* ***90, TOWING WEIGHTS****.*

The Touch screen can display a rear view to assist with the reversing of the vehicle with a trailer attached. See **127, SURROUND CAMERA SYSTEM** and also **91, TOW ASSIST**.

TOW BALL MOUNTED ACCESSORIES

Before fitting a tow ball mounted accessory, make sure it has been approved by the vehicle manufacturer, for use on these vehicles.
The use of unsuitable equipment can result in severe damage to the tow ball and the tow bar.

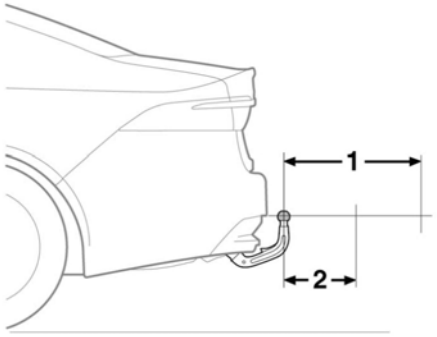

E176532

Before fitting an accessory to the tow ball, observe the following guidelines:

1. The attached accessory must not protrude more than 700 mm from the tow ball.
2. The centre of gravity of the mounted equipment and load combined should not exceed a distance of 390 mm from the tow ball. The maximum weight at this distance must not exceed 82.4 kg.

Note: *The forces exerted by the trailer's nose load and tow ball mounted accessories are different in nature and; therefore, a separate limit applies to both.*

Note: *It is recommended that only accessories approved by the vehicle manufacturer are used.*