FRONT HEAD RESTRAINTS

Head restraints are designed to support the head, not the back of the neck. The head restraint must be positioned correctly to restrain rearward movement of the head in a collision or sudden stop.

While stationary, adjust the head restraint so that the top of the head restraint is the same height as the top of the seat occupant's head. An incorrectly adjusted head restraint increases the risk of death or serious injury in the event of a collision.

Never adjust the head restraints while the vehicle is in motion.

Do not drive or carry passengers with the head restraint removed from an occupied seat. The absence of a correctly adjusted head restraint increases the risk of neck injury in the event of a collision.

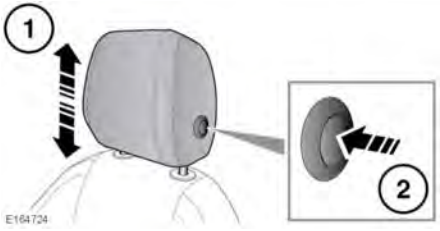

1. To raise, pull the head restraint upwards, it will click and lock in to position.

   Note: *Do not try to raise the head restraint further than the third adjustment position.*

2. To lower, press and head the button on the side of the head restraint, then push down.

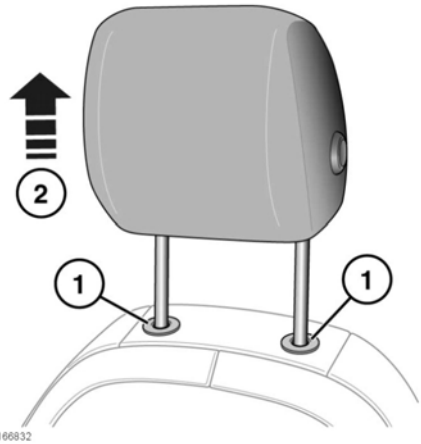

To remove the head restraint, raise the head restraint to its uppermost position.

1. Press and hold the seatback socket, on each side of the head restraint.
2. With the aid of a second person, lift the head restraint out of the seatback.

Always store a removed head restraint securely.

To refit the head restraint:

Making sure that the head restraint is facing the correct direction. Insert the stems of the head restraint into the seatback sockets, and push it downwards until at least the first click.

Adjust the head restraint to suit the seat occupant.

REAR HEAD RESTRAINTS

Head restraints are designed to support the head, not the back of the neck. The head restraint must be positioned correctly to restrain rearward movement of the head in a collision or sudden stop.

While stationary, adjust the head restraint so that the top of the head restraint is the same height as the top of the seat occupant's head. An incorrectly adjusted head restraint increases the risk of death or serious injury in the event of a collision.

Never adjust the head restraints while the vehicle is in motion.

It is possible to swivel the head restraint forwards or backwards. For greater protection in the event of a collision, the head restraint should be adjusted, so that it is as close to the back of the seat occupant's head as is practical.

Do not drive or carry passengers with the head restraint removed from an occupied seat. The absence of a correctly adjusted head restraint increases the risk of neck injury in the event of a collision.

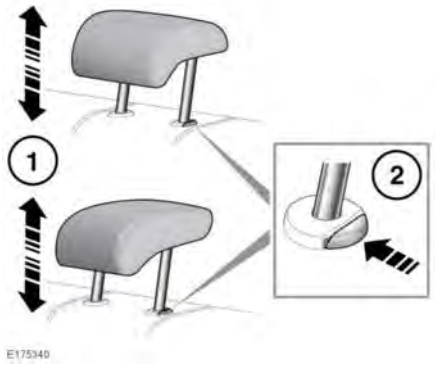

1. To raise, pull the head restraint upwards, it will click and lock into position.
2. To lower, press and hold the locking collar, then push down on the head restraint.



To remove the head restraint, raise the head restraint to its uppermost position.

1. Press in the locking collar, while also pressing down and holding the seatback socket.
2. With the aid of a second person, lift the head restraint out of the seatback.

Always store a removed head restraint securely.

To refit the head restraint:

Making sure that the head restraint is facing the correct direction. Insert the stems of the head restraint into the seatback sockets, and push downwards until at least the first click.

Adjust the head restraint to suit the seat occupant.