Daytime running lamp bulb removal

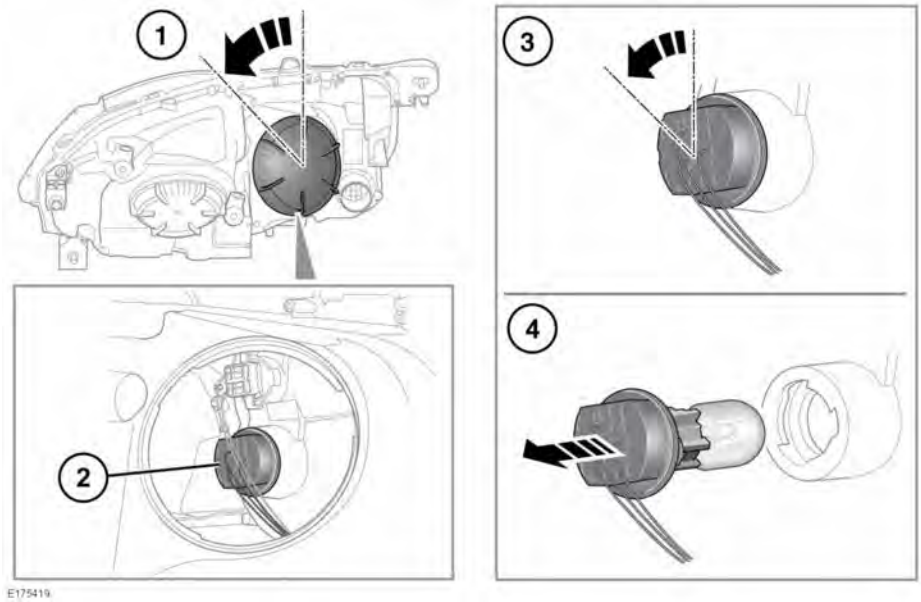

Open the bonnet and follow the procedure below:

1. Rotate the appropriate headlamp cover, approximately 45 degrees counter-clockwise, to release and then lightly pull away to remove it from the headlamp.

   Note: *Note the orientation of the cover to aid refitting.*

2. Locate the Daytime running lamp bulb holder.
3. Rotate the bulb holder, approximately 45 degrees, counter-clockwise.
4. Pull to remove the bulb holder from the headlamp, and access the bulb.

   Note: *Note the orientation of the bulb holder/bulb unit to aid refitting.*

Reverse the removal procedure to install a new bulb.

FRONT DIRECTION INDICATOR BULB REPLACEMENT

See **200, CHANGING A BULB**.

The air cleaner will have to be removed to allow access to the left-side headlamp and also for the right-side headlamp for vehicles with a 3.0L engine. See the air cleaner removal information, **202, DAYTIME RUNNING LAMP BULB REPLACEMENT - HALOGEN HEADLAMP**.

Halogen headlamp direction indicator bulb

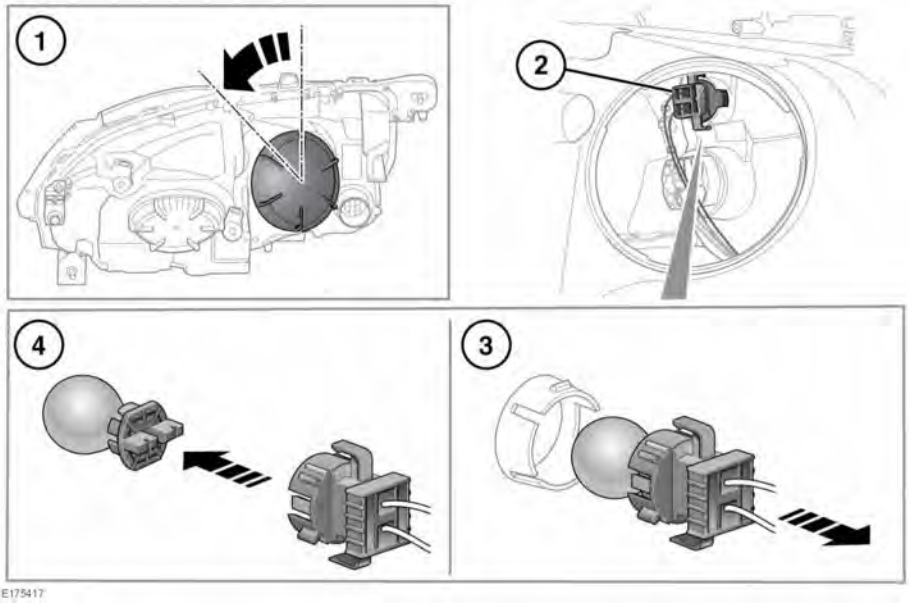

1. Rotate the appropriate headlamp cover, approximately 45 degrees counter-clockwise, to release and remove.

   Note: *Note the orientation of the cover to aid refitting.*
2. Locate the direction indicator bulb.
3. Pull the bulb holder to remove it from the headlamp.

   Note: *Note the orientation of the bulb holder to aid refitting.*
4. Pull the bulb to remove it from the bulb holder.

   Note: *Note the orientation of the bulb to aid refitting.*

Reverse the removal procedure to install a new bulb.

Xenon headlamp direction indicator bulb

