- Once stowed, the LED indicator lamp will stop flashing and will be solidly lit for 2 seconds and will then extinguish.
- To stop movement of the powered tow ball, press the tow ball button. To reset the tow ball, press the tow ball button again. During the reset operation, the powered tow ball will fully stow and then fully deploy.
- If, during the operation of the powered tow ball, an obstruction occurs, tow ball movement will stop. The LED indicator lamp will flash faster, accompanied by a 2 second warning tone. When the obstruction has been cleared, press the tow ball button to reset the tow ball.
- If the vehicle is driven with the tow ball neither fully deployed or fully stowed, a warning tone will sound for 10 seconds. Do not tow with the tow ball in this state.
- If the tow ball fails to stow in extreme low temperatures, then press and hold the tow ball button for 10 seconds to initiate the stowing operation.
- In the event of unexpected operation, press the tow ball button to reset the tow ball.

Make sure that the powered tow ball is fully deployed before connecting a trailer/caravan.

2. Trailer lamp test button: Press to start a 3 minute sequence for both the vehicle and the trailer's lamp testing.
   - For the test to operate, all of the vehicle's lamps should be switched off, the ignition should be switched off and the Electric Parking Brake (EPB) applied.
   - The vehicle's lamps and all of the trailer's lamps will operate at the same time so that a visual check can be made of all the lamps.
   - The 3 minute sequence can be stopped, at any time, by pressing the trailer lamp test button again, by manually switching on the vehicle's lamps,or by switching the ignition on.

Note: *This test feature only allows an observer to check that the lamps are illuminating. The car does not perform any measurements during this test and faulty trailer lamps will not show any errors during this test.*

TRAILER ELECTRICAL CONNECTION

Only attach approved electrical connectors, which are in good condition, to the trailer socket.

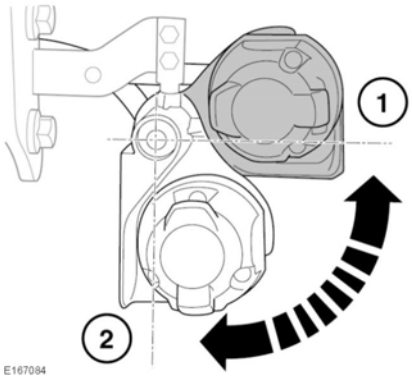

The detachable tow ball's trailer socket should be manually deployed (**2**) and stowed (**1**), as illustrated.

The electric deployable tow ball's trailer socket will deploy and stow automatically with the tow ball.