STORAGE COMPARTMENTS

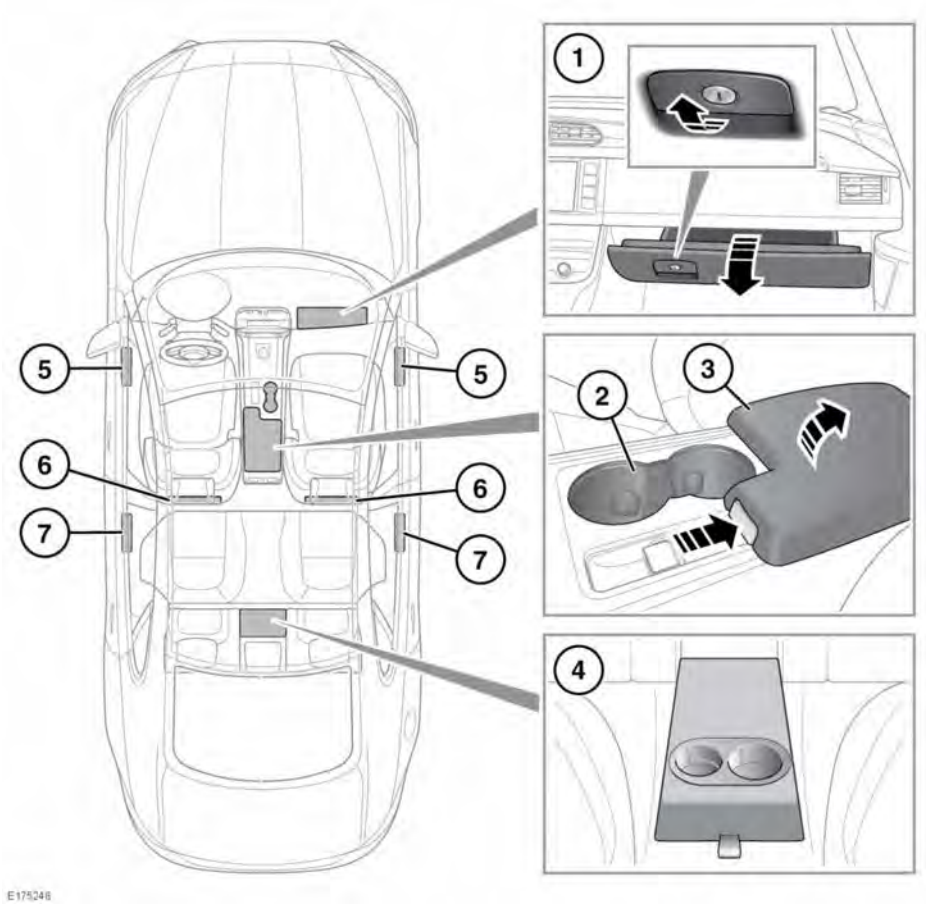

1. Glovebox: Pull the release handle to open. The glovebox can be locked/unlocked using the emergency key blade, mounted in the vehicle's Smart key. See **6, UNLOCKING THE VEHICLE**.

   Note: *When Valet mode is selected, the glovebox will not open.*

2. Front cup holders.

   Do not drink, or use the cup holders when driving.

3. Cubby box: Push and hold the release button and then lift to open the cubby box lid. To close, lower the lid and then lightly press to engage the catch.

4. Rear cup holders: Pull the tag at the top of the stowed rear seat's armrest and lower.