TOW BAR DIMENSIONS AND MOUNTING POINTS

Detachable tow bar

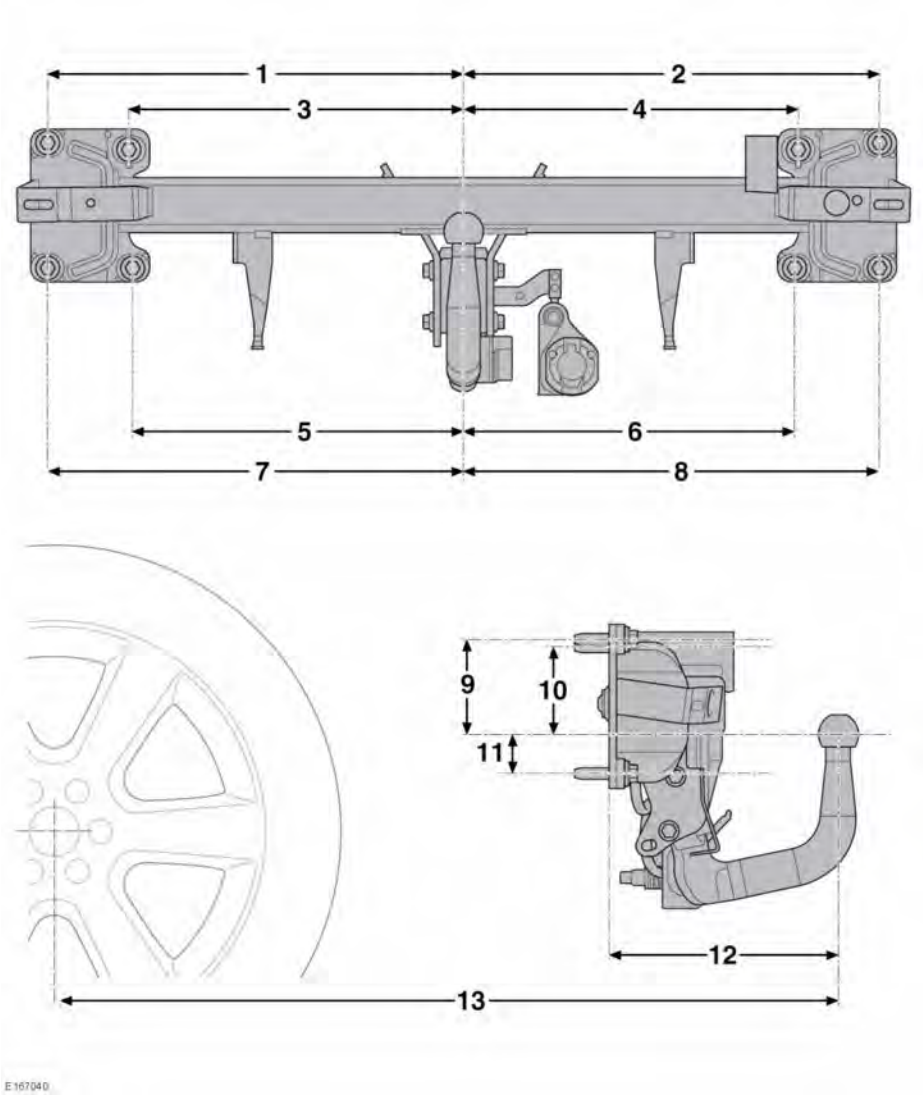

Dimension	Millimetres
1	534
2	534
3	430
4	430
5	425
6	425
7	534
8	534
9	114
10	106
11	47
12	275
13	1 080

Note: *These dimensions refer to towing equipment officially released by the vehicle manufacturer.*

Deployable tow bar

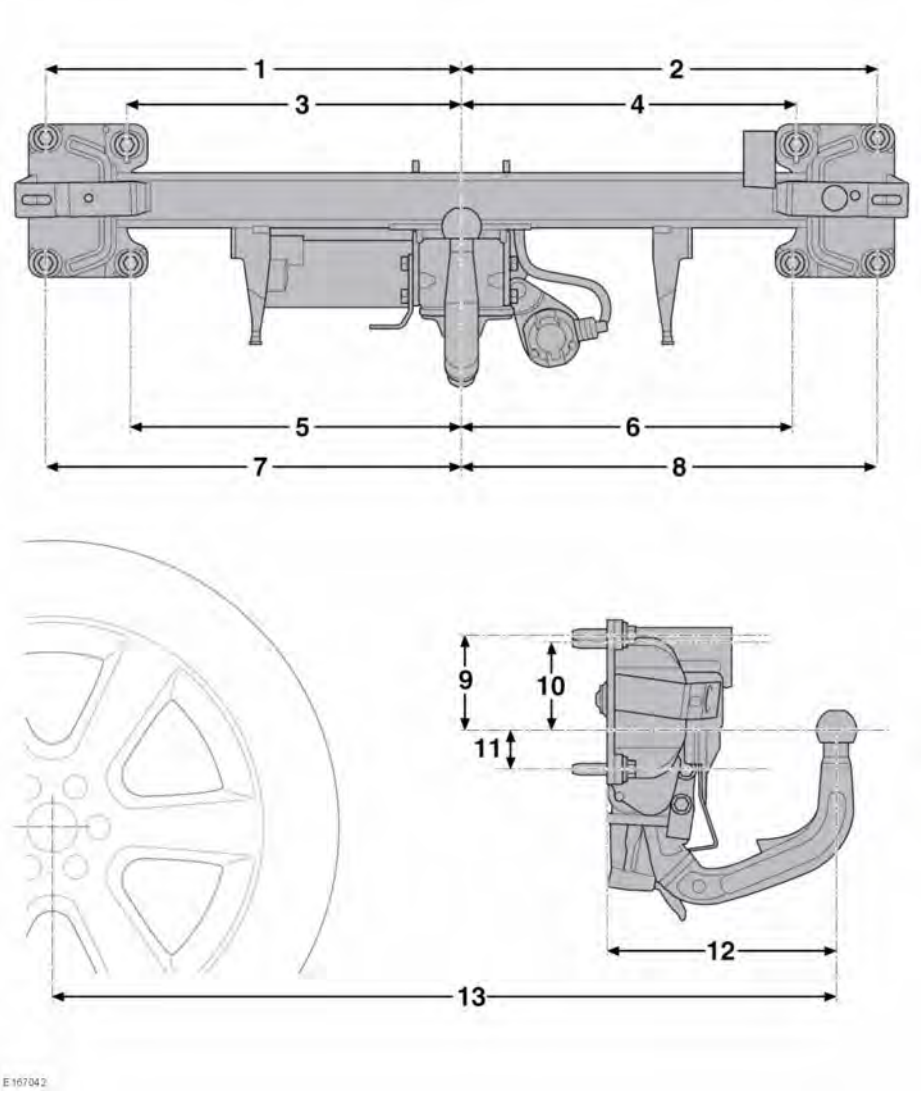

Dimension	Millimetres
1	534
2	534
3	430
4	430
5	425
6	425
7	534
8	534
9	114
10	106
11	47
12	275
13	1 080

Note: *These dimensions refer to towing equipment officially released by the vehicle manufacturer.*