12. Heated front screen: Press to switch on/off.
13. Heated rear screen: Press to switch on/off.

    Note: *The heated front and rear screens, will operate only when the engine is running.*

    Do not attach labels to the rear screen. Do not scrape or use abrasive materials to clean the inside of the rear screen.
14. Air distribution: Press to select the desired air distribution via the **FRONT CLIMATE** screen.
15. Press to select the Heated/Climate seat menu.
16. **AUTO** mode: Press to switch the fully automatic mode on/off. Dependent on the vehicle's specification, the various options for **AUTO** mode can be set via the **CLIMATE SETTINGS** menu.
17. Press repeatedly to increase the temperature for the front right side of the vehicle.
18. Press repeatedly to decrease the temperature for the front left side of the vehicle.
19. Recirculation: Press for timed recirculation (recirculation will operate for 4 minutes) or press and hold for continuous recirculation. Press again to switch off.

    Note: *Prolonged use at low temperatures may cause the windows to mist.*
20. Press to switch maximum defrost for the windscreen on/off.
21. Press to decrease the blower speed.
22. Press to increase the blower speed.
23. **MAX A/C**: Press to switch the maximum air conditioning (A/C) mode on/off.
24. **A/C**: Press to switch the air conditioning (A/C) system on/off.
25. Press repeatedly to decrease the temperature for the front right side of the vehicle.

Note: *Some of the buttons will have an LED indicator lamp that will illuminate to confirm selection.*

Cooled Glove Box

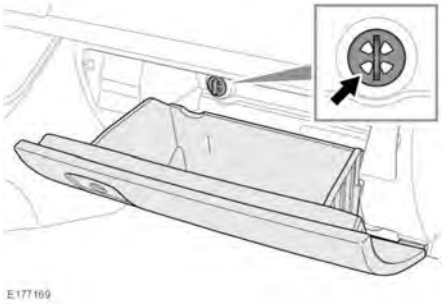

The glove box temperature can be controlled using the vent located in the glove box. Rotate counter-clockwise to open, or clockwise to close the vent.

Note: *The glove box temperature can only be reduced if the engine is running, and the air conditioning is switched on.*

INSTRUCTIONAL VIDEO



CLIMATE SETTINGS

Touch the **GENERAL SETTINGS** menu soft key on the **FRONT CLIMATE** menu screen and then select **Climate**. See **78, CLIMATE CONTROL**.