HALOGEN LOW AND HIGH BEAM BULB

See **200, CHANGING A BULB**.

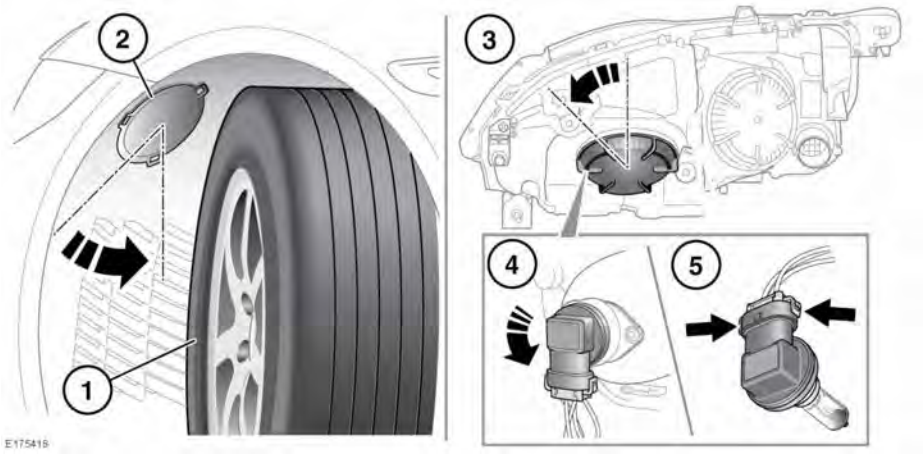

To prevent the vehicle from moving and causing personal injury, make sure that the Electric Parking Brake (EPB) is applied.

1. To allow for greater access, start the engine and turn the steering onto the relevant full lock. Switch off the ignition.
2. Rotate the vehicle cover, approximately 45 degrees counter-clockwise, to release and then pull to remove.
3. Rotate the appropriate headlamp cover, approximately 45 degrees counter-clockwise, to release and then pull to remove.

   Note: *Note the orientation of the cover to aid refitting.*
4. Rotate the bulb holder, approximately 45 degrees counter-clockwise, to release and then pull to remove.

   Note: *Note the orientation of the bulb holder to aid refitting.*
5. Release the clips and remove the electrical connector.

   Note: *Note the orientation of the bulb to aid refitting.*

Reverse the removal procedure to install a new bulb.

Make sure to straighten the steering system before driving the vehicle.

DAYTIME RUNNING LAMP BULB REPLACEMENT - HALOGEN HEADLAMP

See **200, CHANGING A BULB**.

Air cleaner removal

The air cleaner will have to be removed to allow access to the left-side Daytime running lamp bulb holder/bulb unit on all engine variants. This will also apply to the right-side for vehicles with a 3.0L engine.

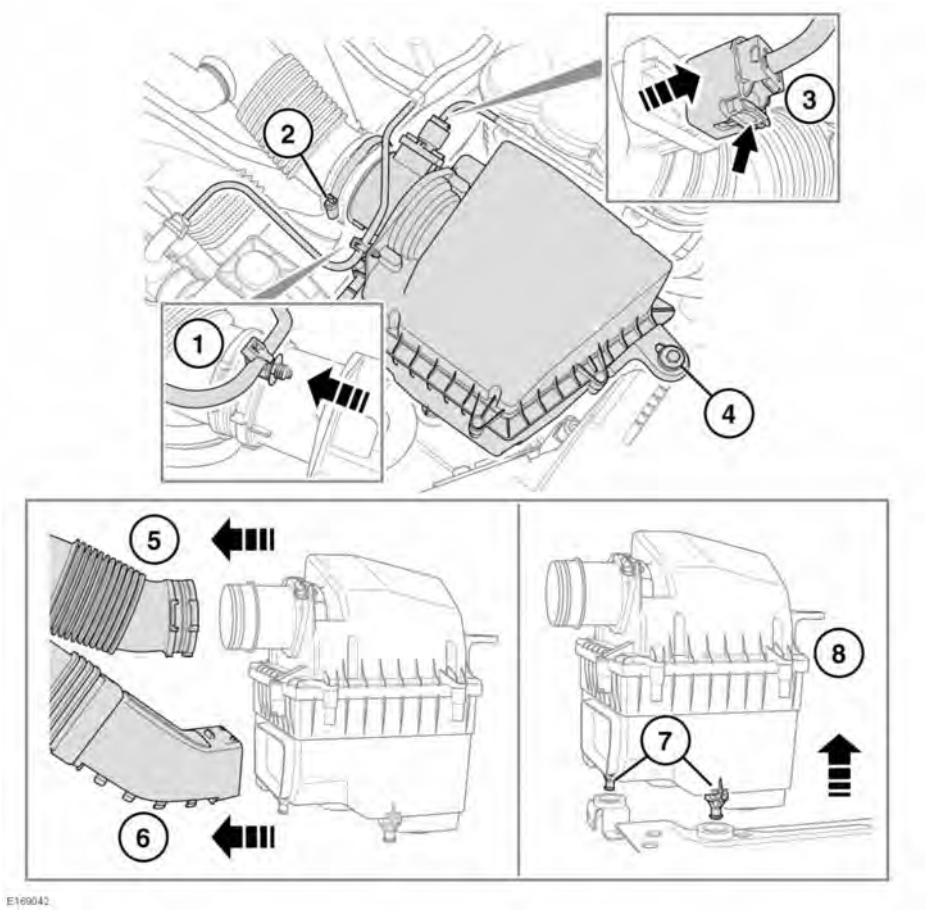

Open the bonnet and follow the procedure below:

1. Lightly pull the coolant pipe/retaining lug, to release it from the air cleaner.

Note: *Do not use excessive force, as this may damage the coolant pipe.*

2. Continually turn the air pipe clamp bolt counter-clockwise to loosen and release.

Note: *Do not remove the air pipe clamp.*

3. Press up and hold the lug at the base of the electrical connection and then lightly pull to release it from the air cleaner.
4. Continually turn the air cleaner retaining bolt counter-clockwise to remove.
5. Lightly pull the upper air pipe to release it from the air cleaner.
6. Lightly pull the lower air pipe away, to release it from the air cleaner.
7. Lift up the air cleaner casing, to release the 2 locating/securing lugs.

   Note: *If the rubber grommets remain attached to the air cleaner, then remove them and refit to the vehicle's body before refitting the air cleaner.*
8. Remove the air cleaner from the vehicle.

Observe the position of the coolant pipe, wiring loom, and both air pipes during removal and refitting of the air cleaner.

Reverse the removal procedure to refit the air cleaner.