## DIMENSIONS

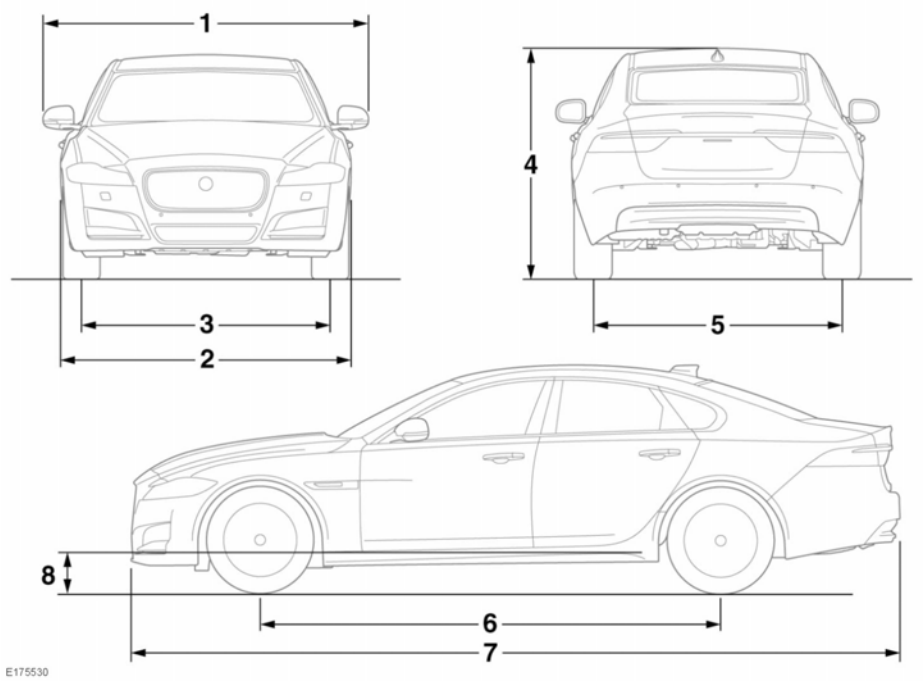


| Item | Description | mm |
|---|---|---|
| 1 | Overall width | 2 091 |
| 2 | Body width | 1 880 |
| 3 | Track - front (vehicles with 20 inch wheels) | 1 597 |
| | Track - front (all other wheel sizes) | 1 605 |
| 4 | Height | 1 457 |
| 5 | Track - rear (vehicles with 20 inch wheels) | 1 586 |
| | Track - rear (all other wheel sizes)) | 1 594 |
| 6 | Wheelbase | 2 960 |
| 7 | Length | 4 954 |

| Item | Description | mm |
|---|---|---|
| 8 | Maximum wading depth<br>Maximum wading speed is 7 km/h (4 mph) | 300 |
| - | Turning circle (wall to wall) | 11.94 metres |